Regolatore_di_Carica_PWM

By Kekko.Alkemi

http://energiaalternativa.forumcommunity.net

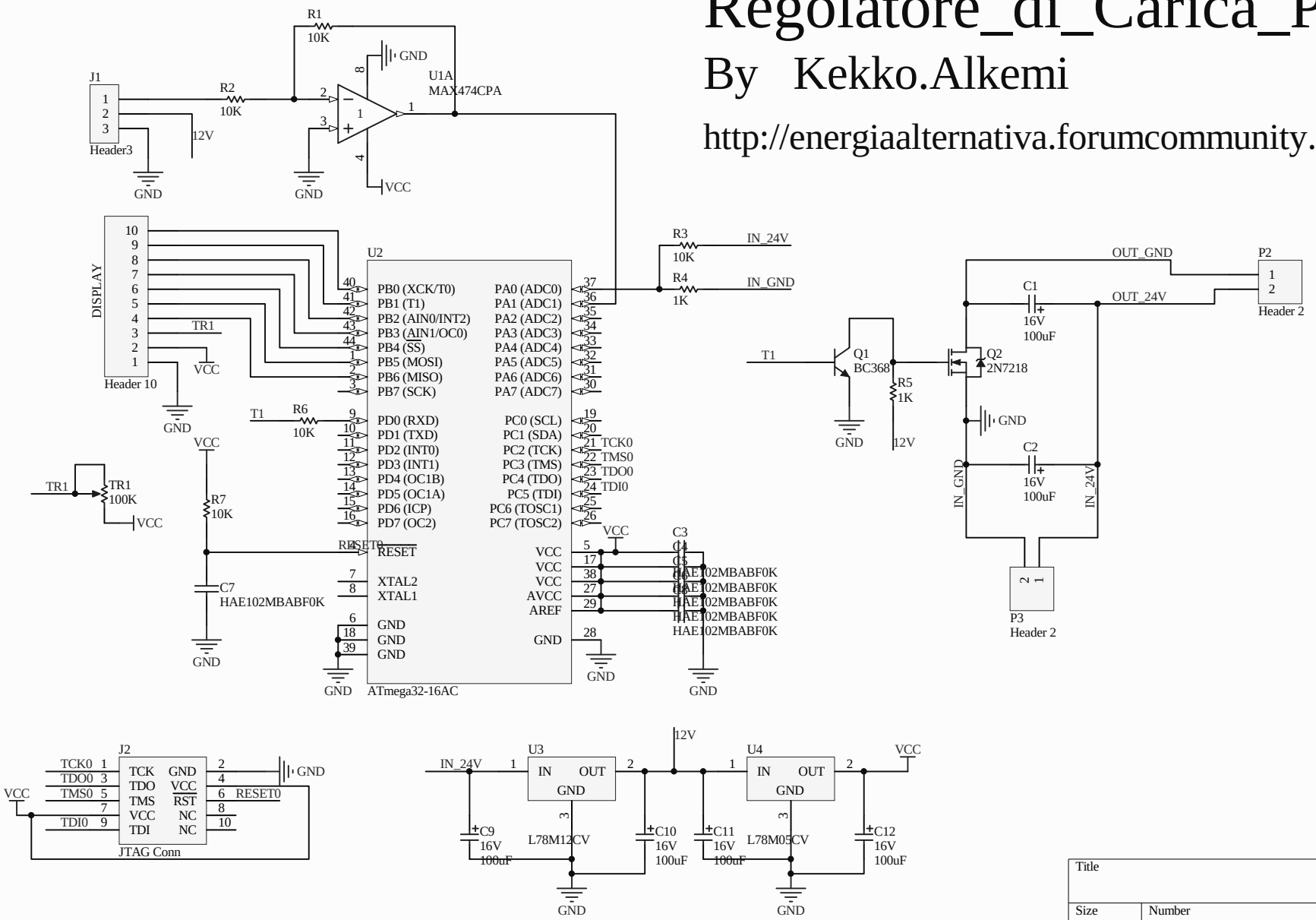

Title		
Size A4	Number	Revision
Date: 19/04/2011		Sheet of
File: D:\Work\..\Regolatore.SchDoc		Drawn By: